FRAME ELEVATIONS

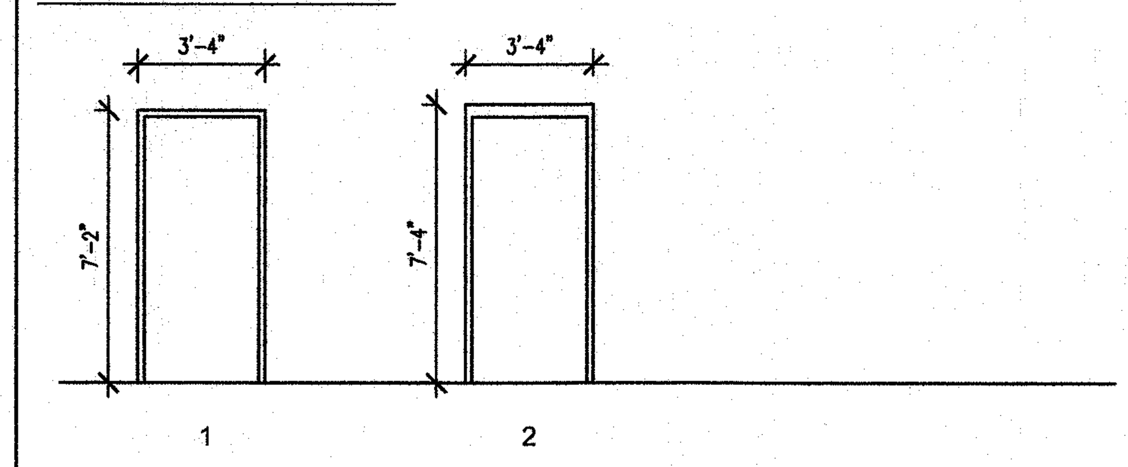

DOOR ELEVATIONS

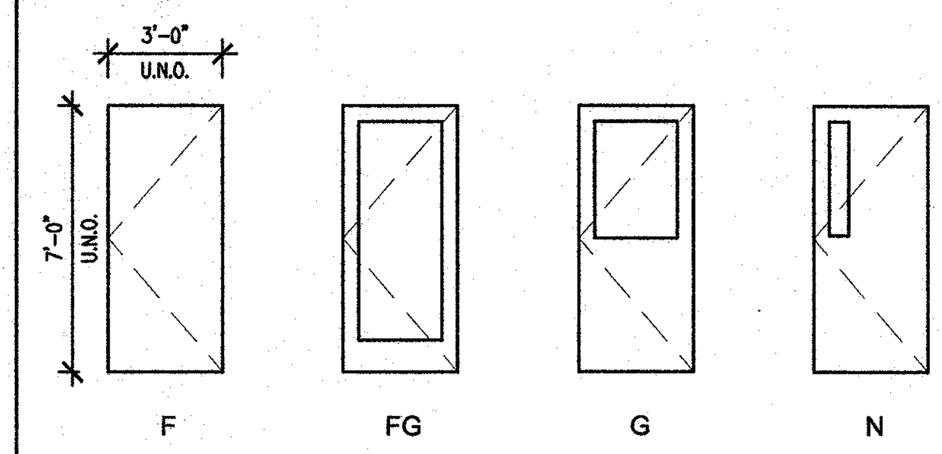

F FLUSH
FG FULL GLASS
G HALF GLASS
N NARROW LITE

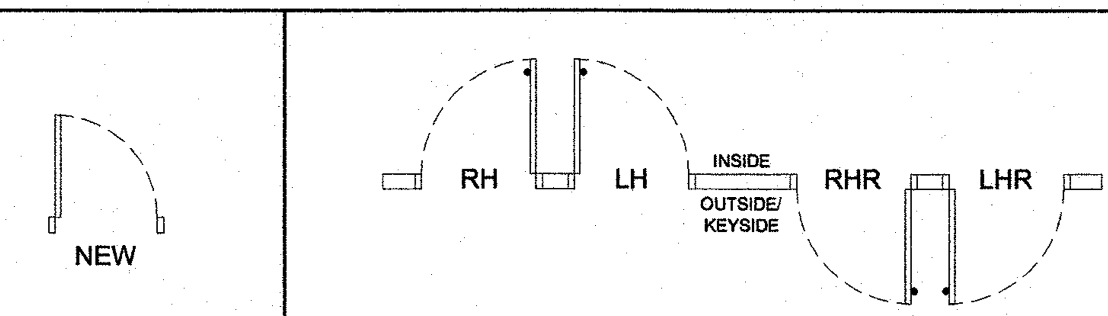

DOOR AND FRAME SCHEDULE

NR.	DOOR SIZE WIDTH	DOOR SIZE HGT	DOOR SIZE THK	DOOR MAT'L	DOOR ELEV	DOOR HAND	FRAME MAT'L	FRAME ELEV	FRAME DETAIL HEAD	FRAME DETAIL JAMB	FRAME DETAIL SILL	FIRE RATING LABEL	HARDWARE SET	REMARKS
101	6'-0"	7'-0"	1 ¾"	ALUM	FG	NA	ALUM	--	--	--	--	--	--	ACCESS CARD READER
102	6'-0"	7'-0"	1 ¾"	WD	N	NA	HM	1	--	--	--	1-HR	--	ALARM ACTIVATED CLOSER
103A	6'-0"	7'-0"	1 ¾"	ALUM	FG	NA	ALUM	--	--	--	--	--	PP	ACCESS CARD READER
103B	6'-0"	7'-0"	1 ¾"	ALUM	FG	NA	ALUM	--	--	--	--	--	PP	
103C	6'-0"	7'-0"	1 ¾"	WD	F	NA	HM	1	--	--	--	1-HR	--	ALARM ACTIVATED CLOSER
104A	3'-0"	7'-0"	1 ¾"	WD	F	LHR	HM	1	--	--	--	--	--	--
104B	3'-0"	7'-0"	1 ¾"	WD	F	RHR	HM	1	--	--	--	1-HR	--	--
105A	6'-0"	7'-0"	1 ¾"	WD	N	NA	HM	1	--	--	--	1-HR	--	ALARM ACTIVATED CLOSER
105B	3'-0"	7'-0"	1 ¾"	WD	F	LHR	HM	1	--	--	--	--	--	--
107	6'-0"	7'-0"	1 ¾"	WD	F	NA	HM	1	--	--	--	1-HR	S	--
108	6'-0"	7'-0"	1 ¾"	WD	F	NA	HM	1	--	--	--	--	--	--
109A	6'-0"	7'-0"	1 ¾"	HM	F	NA	HM	1	--	--	--	2-HR	0	--
109B	3'-0"	7'-0"	1 ¾"	HM	F	--	HM	1	--	--	--	2-HR	0	--
109C	3'-0"	7'-0"	1 ¾"	HM	F	--	HM	1	--	--	--	2-HR	0	--
109D	3'-0"	7'-0"	1 ¾"	ALUM	--	--	ALUM		--	--	--	--	--	PANIC HARDWARE REQUIRED
110	3'-0"	7'-0"	1 ¾"	WD	F	LH	HM	1	--	--	--	--	B	--
111	3'-0"	7'-0"	1 ¾"	WD	F	LHR	HM	1	--	--	--	--	S	--
112	3'-0"	7'-0"	1 ¾"	WD	F	RH	HM	1	--	--	--	--	S	--
113	3'-0"	7'-0"	1 ¾"	WD	F	RH	HM	1	--	--	--	--	B	--
114A	3'-0"	7'-0"	1 ¾"	HM	F	LH	HM	1	--	--	--	2-HR	0	--
114B	3'-0"	7'-0"	1 ¾"	WD	F	LH	HM	1	--	--	--	--	0	--
115A	3'-0"	7'-0"	1 ¾"	HM	F	LH	HM	1	--	--	--	2-HR	S	--
115B	6'-0"	7'-0"	1 ¾"	HM	N	NA	HM	2	--	--	--	--	--	--
116	3'-0"	7'-0"	1 ¾"	HM	N	LHR	HM	2	--	--	--	--	--	ACCESS CARD READER
117	3'-0"	7'-0"	1 ¾"	WD	F	RH	HM	1	--	--	--	--	0	--
118	3'-0"	7'-0"	1 ¾"	WD	F	RH	HM	1	--	--	--	2-HR	S	--
119	3'-0"	7'-0"	1 ¾"	WD	F	RH	HM	1	--	--	--	--	0	--
120	6'-0"	7'-0"	1 ¾"	WD	F	NA	HM	1	--	--	--	--	S	--
121A	3'-0"	7'-0"	1 ¾"	WD	F	RH	HM	1	--	--	--	--	--	--
121B	3'-0"	7'-0"	1 ¾"	WD	F	LH	HM	1	--	--	--	--	--	--
122	3'-0"	7'-0"	1 ¾"	WD	F	LH	HM	1	--	--	--	--	S	--
123A	6'-0"	7'-0"	1 ¾"	WD	F	NA	HM	1	--	--	--	2-HR	S	--
123B	6'-0"	7'-0"	1 ¾"	HM	N	NA	---	2	--	--	--	--	--	--
124A	3'-0"	7'-0"	1 ¾"	WD	F	RH	HM	1	--	--	--	1-HR	--	--
124B	3'-0"	7'-0"	1 ¾"	HM	N	RH	HM	2	--	--	--	--	--	ACCESS CARD READER
125	3'-0"	7'-0"	1 ¾"	WD	F	RH	HM	1	--	--	--	--	B	--
126	3'-0"	7'-0"	1 ¾"	WD	F	RH	HM	1	--	--	--	--	B	--
127	3'-0"	7'-0"	1 ¾"	WD	F	LH	HM	1	--	--	--	--	B	--
128	3'-0"	7'-0"	1 ¾"	WD	F	LH	HM	1	--	--	--	--	B	--
129	3'-0"	7'-0"	1 ¾"	WD	2	LHR	HM	1	--	--	--	--	--	--
130	3'-0"	7'-0"	1 ¾"	WD	F	RH	HM	1	--	--	--	--	0	--
131A	3'-0"	7'-0"	1 ¾"	WD	F	RH	HM	1	--	--	--	--	0	--
131B	3'-0"	7'-0"	1 ¾"	WD	F	LHR	HM	1	--	--	--	--	0	--
132	3'-0"	7'-0"	1 ¾"	WD	F	LH	HM	1	--	--	--	--	0	--
133	3'-0"	7'-0"	1 ¾"	WD	F	LH	HM	1	--	--	--	--	0	--
134	3'-0"	7'-0"	1 ¾"	WD	F	LH	HM	1	--	--	--	--	0	--
135	3'-0"	7'-0"	1 ¾"	WD	F	LH	HM	1	--	--	--	--	0	--
136	3'-0"	7'-0"	1 ¾"	WD	F	LH	HM	1	--	--	--	--	0	--
137	3'-0"	7'-0"	1 ¾"	WD	F	LH	HM	1	--	--	--	--	0	--
138	3'-0"	7'-0"	1 ¾"	WD	F	LH	HM	1	--	--	--	--	0	--
139	3'-0"	7'-0"	1 ¾"	WD	F	LH	HM	1	--	--	--	--	0	--
140	3'-0"	7'-0"	1 ¾"	WD	F	RH	HM	1	--	--	--	--	0	--
141	3'-0"	7'-0"	1 ¾"	WD	F	LH	HM	1	--	--	--	--	0	--
143	6'-0"	7'-0"	1 ¾"	WD	F	NA	HM	1	--	--	--	--	0	--
144	3'-0"	7'-0"	1 ¾"	WD	F	RHR	HM	1	--	--	--	--	S	--
146	3'-0"	7'-0"	1 ¾"	WD	F	LH	HM	1	--	--	--	--	0	--
147	3'-0"	7'-0"	1 ¾"	WD	F	LH	HM	1	--	--	--	--	S	--
148	3'-0"	7'-0"	1 ¾"	WD	F	LH	HM	1	--	--	--	--	0	--
149	3'-0"	7'-0"	1 ¾"	WD	F	LH	HM	1	--	--	--	--	0	--
150	3'-0"	7'-0"	1 ¾"	WD	F	LH	HM	1	--	--	--	1-HR	S	--
151	3'-0"	7'-0"	1 ¾"	WD	F	LH	HM	1	--	--	--	2-HR	S	--
201	3'-0"	7'-0"	1 ¾"	WD	F	RH	HM	1	--	--	--	1-HR	C	--
202	3'-0"	7'-0"	1 ¾"	WD	F	RH	HM	1	--	--	--	--	0	--
203	6'-0"	7'-0"	1 ¾"	WD	N	NA	HM	1	--	--	--	--	0	--
205	3'-0"	7'-0"	1 ¾"	WD	F	RH	HM	1	--	--	--	1-HR	S	--
206	3'-0"	7'-0"	1 ¾"	WD	F	RH	HM	1	--	--	--	1-HR	S	--
207	3'-0"	7'-0"	1 ¾"	WD	F	RH	HM	1	--	--	--	--	PPL	--
208	3'-0"	7'-0"	1 ¾"	WD	F	RHR	HM	1	--	--	--	--	S	--
209	3'-0"	7'-0"	1 ¾"	WD	F	LH	HM	1	--	--	--	--	PPL	--
210A	3'-0"	7'-0"	1 ¾"	WD	F	LHR	HM	1	--	--	--	--	0	--
210B	3'-0"	7'-0"	1 ¾"	WD	F	LHR	HM	3	--	--	--	--	0	--
211A	4'-0"	7'-0"	NA	*	*	*	HM	1	--	--	--	--	*	*CASED OPENING
211B	4'-0"	7'-0"	NA	*	*	*	HM	1	--	--	--	--	*	*CASED OPENING
212	3'-0"	7'-0"	1 ¾"	WD	F	RH	HM	1	--	--	--	--	0	--
213	3'-0"	7'-0"	1 ¾"	WD	F	RH	HM	1	--	--	--	--	0	--
214	3'-0"	7'-0"	1 ¾"	WD	F	RH	HM	1	--	--	--	--	0	--
215	3'-0"	7'-0"	1 ¾"	WD	F	RH	HM	1	--	--	--	--	0	--
216	3'-0"	7'-0"	1 ¾"	WD	F	LH	HM	1	--	--	--	*	S	*POSITIVE PRESSURE CATEGORY B
218A	3'-0"	7'-0"	1 ¾"	WD	F	LH	HM	1	--	--	--	--	0	--
218B	3'-0"	7'-0"	1 ¾"	WD	F	LHR	HM	1	--	--	--	--	0	--
219	3'-0"	7'-0"	1 ¾"	WD	F	LH	HM	1	--	--	--	--	0	--
220	3'-0"	7'-0"	1 ¾"	WD	F	LH	HM	1	--	--	--	--	0	--
221	3'-0"	7'-0"	1 ¾"	WD	F	RH	HM	1	--	--	--	--	B	--
222	3'-0"	7'-0"	1 ¾"	WD	F	LH	HM	1	--	--	--	--	B	--
223	3'-0"	7'-0"	1 ¾"	WD	F	LH	HM	1	--	--	--	--	0	--
224	3'-0"	7'-0"	1 ¾"	WD	F	LH	HM	1	--	--	--	--	0	--
225	3'-0"	7'-0"	1 ¾"	WD	F	RH	HM	1	--	--	--	--	S	--
226A	3'-0"	7'-0"	1 ¾"	WD	F	LH	HM	1	--	--	--	--	0	--
226B	3'-0"	7'-0"	1 ¾"	WD	F	RH	HM	1	--	--	--	--	0	--
227	3'-0"	7'-0"	1 ¾"	WD	F	LH	HM	1	--	--	--	--	0	--
228A	3'-0"	7'-0"	1 ¾"	WD	F	RH	HM	1	--	--	--	1-HR	0	--
228B	3'-0"	7'-0"	1 ¾"	WD	F	RH	HM	1	--	--	--	1-HR	0	--
230	3'-0"	7'-0"	1 ¾"	WD	F	LH	HM	1	--	--	--	--	PPL	--
231	3'-0"	7'-0"	1 ¾"	WD	F	RH	HM	1	--	--	--	--	PPL	--
232	3'-0"	7'-0"	1 ¾"	WD	F	RH	HM	1	--	--	--	--	S	--
233A	6'-0"	7'-0"	1 ¾"	WD	F	NA	HM	1	--	--	--	--	0	--
233B	3'-0"	7'-0"	1 ¾"	WD	F	RHR	HM	1	--	--	--	--	0	--
233C	6'-0"	7'-0"	1 ¾"	WD	F	NA	HM	1	--	--	--	--	0	--
233D	3'-0"	7'-0"	1 ¾"	WD	F	RHR	HM	1	--	--	--	--	0	--
233E	3'-0"	7'-0"	1 ¾"	WD	F	LHR	HM	1	--	--	--	--	0	--
234	3'-0"	7'-0"	1 ¾"	WD	F	LH	HM	1	--	--	--	1-HR	C	--
244	2'-6"	7'-0"	1 ¾"	WD	F	LHR	HM	1	--	--	--	--	P	--

DOOR NOTES:

- DOOR GRADE LEVELS
  - LEVEL 1 STANDARD 1 ⅜"
  - LEVEL 2 HEAVY 1 ¾"
  - LEVEL 3 EXTRA HEAVY 1 ¾"
  - LEVEL 4 MAXIMUM 1 ¾"
- ALL DOORS LEVEL 2 "HEAVY DUTY" UNLESS NOTED OTHERWISE;
- ALL DOORS "FULL FLUSH" CONSTRUCTION UNLESS MARKED AS "SEAMLESS";
- DOORS IN FIRE-RATED ASSEMBLIES MUST MAINTAIN REQUIRED RATING;
- IN FIRE RATED DOORS, ALARM-ACTIVATED RELEASES REQUIRED ON ALL HOLD-OPEN DEVICES;
- PANIC EXIT DEVICES AS NOTED IN SCHEDULE.

DOOR HARDWARE NOTES:

1. ALL HINGES TO BE COMMERCIAL GRADE BALL-BEARING TYPE
2. HARDWARE IN FIRE-RATED ASSEMBLIES MUST MAINTAIN REQUIRED FIRE-RATING
3. ALL KEYING TO BE COORDINATED WITH OWNER FACILITIES
4. HARDWARE SETS--

B BATHROOM
- LATCHBOLT BY EITHER LEVER UNLESS OUTSIDE LEVER IS LOCKED BY PUSH BUTTON IN INSIDELEVER
- TURNING INSIDE LEVER OR CLOSING DOOR RELEASES BUTTON
- EMERGENCY BUTTON IN OUTSIDE LEVER UNLOCKS, WITH USE OF A BLADE SCREW DRIVER OUTSIDE LEVER AND RELEASES INSIDE BUTTON

C CLASSROOM
- GUARDBOLT DEADLOCKS LATCHBOLT
- LATCHBOLT BY EITHER LEVER UNLESS OUTSIDE LEVER IS LOCKED BY KEY
- KEY IN OUTSIDE LEVER LOCKS OR UNLOCKS OUTSIDE LEVER
- INSIDE LEVER ALWAYS OPERATIVE

O OFFICE
- GUARDBOLT DEADLOCKS LATCHBOLT
- LATCHBOLT BY EITHER LEVER UNLESS OUTSIDE LEVER IS LOCKED BY PUSH/TURN BUTTON IN INSIDE LEVER
- PUSH BUTTON RELEASED BY KEY OUTSIDE OR LEVER INSIDE
- TURN BUTTON MUST BE RELEASED MANUALLY
- KEY RETRACTS LATCHBOLT WHEN OUTSIDE LEVER IS LOCKED

P PASSAGE -
- LATCHBOLT BY EITHER LEVER

PP PUSH/PULL
- FOR WOOD OR CUSTOM HOLLOW METAL DOORS
- LEVER AND ROSE ATTACHED BY THREE SURFACE APPLIED SCREWS
- PUSH PLATE OPPOSITE FACE

PPDL PUSH/PULL - DOUBLE LEVER
- FOR WOOD OR CUSTOM HOLLOW METAL DOORS
- LEVER AND ROSE BOTH SIDES THRU BOLTED AND THREE SURFACE APPLIED SCREWS EACH SIDE

S STOREROOM
- GUARDBOLT DEADLOCKS LATCHBOLT
- LATCHBOLT BY LEVER INSIDE OR KEY OUTSIDE
- OUTSIDE LEVER RIGID AT ALL TIMES

LANTZ
Construction Company
539 SOUTH MAIN STREET
P.O. BOX 515
BROADWAY, VA 22815-0515

540.896.8911 Tel
866.526.8922 Toll free
540.896.6502 Fax
www.lantzcc.com

SEAL:

Lantz Construction Company, hereby reserves its common law copyright and all other property rights in these plans, ideas and designs. These plans, ideas and designs are not to be reproduced, altered or copied in any form or manner whatsoever, nor are they to be assigned to any third party without first obtaining the express written consent of Lantz Construction Company. Title to these drawings remains with Lantz Construction Company without prejudice.

NO.	DATE	REVISION

ROCKINGHAM COUNTY
ADMINISTRATION BUILDING ADDITION
HARRISONBURG, VA

FILE NAME: \\Server2\System\cad_dwgs\2007\Rockingham County\Rockingham PPEA\Rockingham County Admin PPEA\Sheets\07-100-DD-X00-A602 DOOR & WINDOW SCHEDULES.dwg

APPROVALS:

ENGINEERING & DESIGN: DATE:
PROJECT MANAGER: DATE:
ESTIMATING: DATE:
SALES: DATE:

PERMIT SUBMITTAL DATE: ----
DWG PLOT DATE: August 7, 2007
SCALE: AS NOTED
DRAWN BY: XXX

07-100-DD-X12

DOOR & WINDOW SCHEDULES

A602